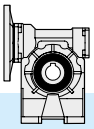

3.2 Designazione

3.2 Designation

3.2 Bezeichnung

Riduttore *Gearbox* Getriebe	Tipo entrata *Input type* Antriebsart	Grandezza *Size* Größe	Versione *Version* Ausführung	Rapporto rid. *Ratio* Untersetzung	Predispos.att. mot. *Motor coupling* Motoranschluss	Posizione di mont. *Mounting position* Einbaulage	Limitatore di coppia. *Torque limiter* Drehmoment-begrenzer	Seconda entrata *Additional input* Zusatzantrieb	Albero uscita *Output shaft* Abtriebswelle	Braccio di reazione *Torque arm* Drehmomentstütze
K	**C**	**50**	**F1S**	**10**	**P.A.M**	**B3**	**LD**	**SeA**	**H**	**BR**
Riduttore a vite senza fine ***Wormgearbox*** **Schneckengetriebe**	 **C**	**30** **40** **50** **63** **75** **90** **110** **130**	**A1-A2** **B1-B2** **V1-V2** **P** **F1S-F2S** **F3S** **F1D-F2D** **F3D**	**5** **7.5** **10** **15** **20** **25** **30** **40** **50** **65** **80** **100**	**56** **63** **71** **80** **90** **100** **112** **132**	**B3** **B6** **B7** **B8** **V5** **V6**	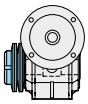 **LS** 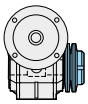 **LD**	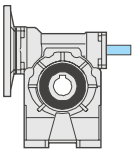 **SeA**	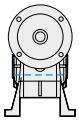 **H** 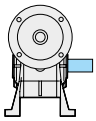 **SD** 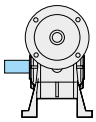 **SS** 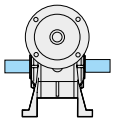 **DD**	 **BR**

Versioni

Versions

Ausführungen

KC..A

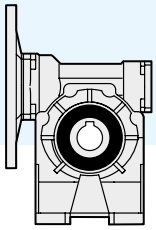

KC..B

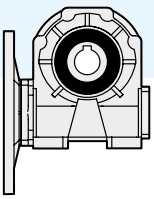

KC..V

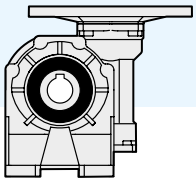

KC..P

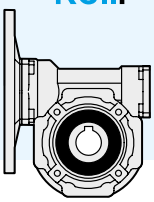

KC..FS

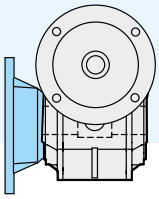

KC..FD

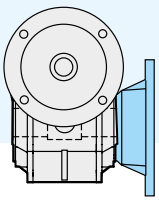

3.3 Lubrificazione

I riduttori a vite senza fine serie K, tranne la grandezza 130, sono forniti completi di lubrificante sintetico a base PAG con indice di viscosità ISO VG320.
Si raccomanda di precisare sempre, in fase di ordine, la posizione di montaggio desiderata.

3.3 Lubrication

KC worm gearboxes, except for the size 130, are supplied with PAG synthetic lubricant featuring an ISO VG320 viscosity class.
Mounting position always to be specified when ordering.

3.3 Schmierung

Schneckengetriebe der Serie KC, außer Groesse 130, werden mit synthetischem Schmiermittel auf PAG Basis und Viskosität Index ISO VG320 geliefert. Im Auftrag bitte immer die gewünschte Einbaulage angeben.

Posizioni di montaggio

Mounting positions

Einbaulagen

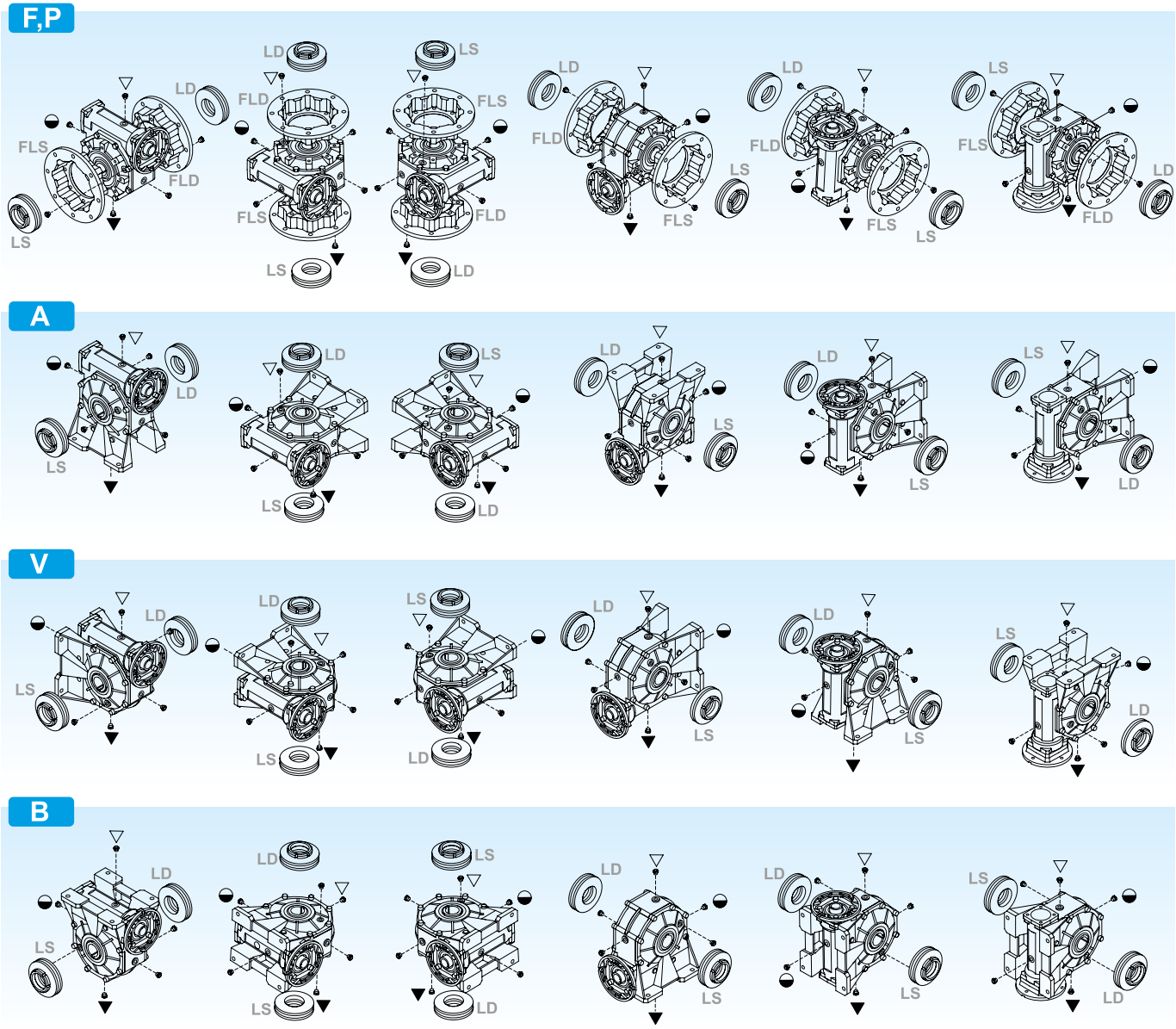

B3 **B6** **B7** **B8** **V5** **V6**

▽ Carico e sfiato / *Filling and breather*
Einfüll und Entlüftung
◒ Livello / *Level* / Ölstand
▼ Scarico / *Drain* / Ablass

Nei corpi in alluminio 30, 40, 50, 63, 75 è presente un solo tappo di riempimento olio.

Aluminium housings size 30, 40, 50, 63 and 75 have one filling plug only.

Gehäuse aus Alumiunium Größe 30, 40, 50, 63 und 75 verfügen über nur eine Einfüllschraube.

3.3 Lubrificazione

3.3 Lubrication

3.3 Schmierung

		Q.tà olio / *Oil quantity* / Schmiermittelmenge [lt]			
		Posizione di montaggio / *Mounting position* / Einbaulage			
		B3	**B6 - B7**	**B8**	**V5 - V6**
KC	**30**	0.015			
	40	0.040			
	50	0.080			
	63	0.160			
	75	0.260			
	90	1	0.8	0.8	1.3
	110	2	1.5	2	2
	130	3	2.6	2.1	2.8

3.4 Posizione morsettiera

3.4 Terminal board position

3.4 Lage der Klemmenkaste

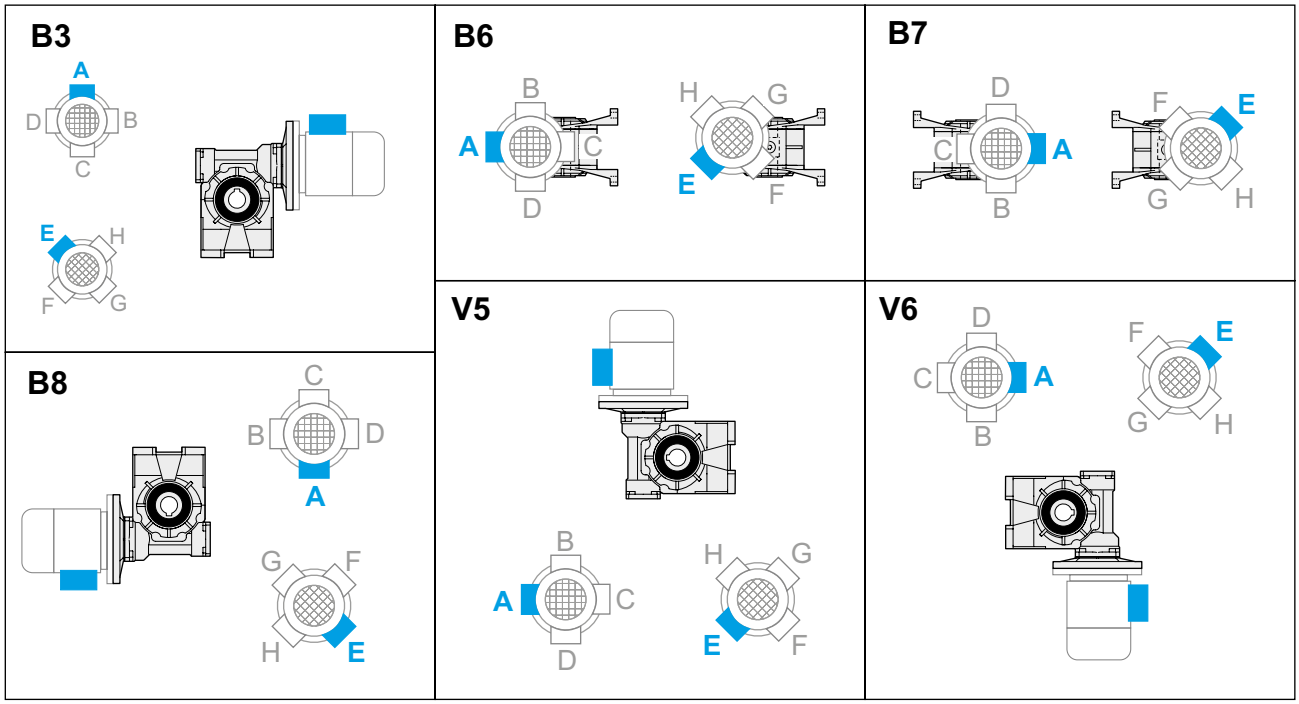

Specificare sempre in fase di ordinazione la posizione di montaggio e la forma costruttiva.
Posizione morsettiera v. pag. 58
(PM=1; PM=2)

Mounting position always to be specified when ordering.
Terminal board position see page 58
(PM=1; PM=2)

Bei der Bestellung immer die gewünschte Montageposition und Bauform angeben.
Lage der Klemmenkaste Seite 58
(PM=1; PM=2)

3.5 Dati tecnici / *3.5 Technical data* / 3.5 Technische Daten

30	n_1 = 2800				KC				
	i_n	n_2 [min-1]	Rd	P_{t0}	T_2 [Nm]	P_1 [kW]	FS'	Input - IEC B5/B14	
	5	560	0.89	—	5.6	**0.37**	2.5	**63**	**56**
	7.5	373	0.86		8	**0.37**	2.0		
	10	280	0.84		11	**0.37**	1.5		
	15	187	0.81		15	**0.37**	1.1		
	20	140	0.76		13	**0.25**	1.2		
	25	112	0.74		16	**0.25**	1.0		
	30	93	0.71		13	**0.18**	1.0		
	40	70	0.65		16	**0.18**	1.0		
Kg 1.2	**50**	56	0.62		14	**0.13**	1.1		
	65	43	0.57		17	**0.13**	1.0	—	
	80	35	0.54		13	**0.09**	1.0		
	100	28	0.52		16	**0.09**	0.8		

30	n_1 =1400				KC				
	i_n	n_2 [min-1]	Rd	P_{t0}	T_2 [Nm]	P_1 [kW]	FS'	Input - IEC B5/B14	
	5	280	0.87	0.40	6.5	**0.22**	2.9	**63**	**56**
	7.5	187	0.84	0.40	9	**0.22**	2.2		
	10	140	0.82	0.40	12	**0.22**	1.8		
	15	93	0.77	0.30	17	**0.22**	1.3		
	20	70	0.72	0.20	18	**0.18**	1.1		
	25	56	0.69	0.20	21	**0.18**	1.0		
	30	47	0.66	0.20	18	**0.13**	1.1		
	40	35	0.59	0.20	21	**0.13**	1.0		
Kg 1.2	**50**	28	0.55	0.20	17	**0.09**	1.1		
	65	22	0.51	0.10	20	**0.09**	1.0	—	
	80	18	0.48	0.10	16	**0.06**	1.0		
	100	14	0.45	0.10	18	**0.06**	0.8		

30	n_1 = 900				KC				
	i_n	n_2 [min-1]	Rd	P_{t0}	T_2 [Nm]	P_1 [kW]	FS'	Input - IEC B5/B14	
	5	180	0.85	—	5.9	**0.13**	3.9	**63**	**56**
	7.5	120	0.82		9	**0.13**	2.9		
	10	90	0.80		11	**0.13**	2.3		
	15	60	0.75		15	**0.13**	1.6		
	20	45	0.69		19	**0.13**	1.2		
	25	36	0.66		23	**0.13**	1.1		
	30	30	0.63		18	**0.09**	1.2		
	40	23	0.55		21	**0.09**	1.1		
Kg 1.2	**50**	18	0.52		16	**0.06**	1.3		
	65	14	0.48		20	**0.06**	1.1	—	
	80	11	0.44		11	**0.03**	1.7		
	100	9	0.42		13	**0.03**	1.1		

30	n_1 = 500				KC				
	i_n	n_2 [min-1]	Rd	P_{t0}	T_2 [Nm]	P_1 [kW]	FS'	Input - IEC B5/B14	
	5	100	0.83	—	—	—	—	**63**	**56**
	7.5	67	0.80		—	—	—		
	10	50	0.77		—	—	—		
	15	33	0.72		—	—	—		
	20	25	0.66		—	—	—		
	25	20	0.62		—	—	—		
	30	17	0.59		—	—	—		
	40	13	0.51		—	—	—		
Kg 1.2	**50**	10	0.48		—	—	—		
	65	8	0.43		—	—	—	—	
	80	6	0.40		—	—	—		
	100	5	0.38		—	—	—		

*** ATTENZIONE:** la coppia massima utilizzabile [T_{2M}] deve essere calcolata utilizzando il fattore di servizio: $T_{2M} = T_2 \times FS'$

**** WARNING:*** *Maximum allowable torque [T_{2M}] must be calculated using the following service factor : $T_{2M} = T_2 \times FS'$*

*** ACHTUNG:** das max. anwendbare Drehmoment [T_{2M}] muss mit folgendem Betriebsfaktor berechnet werden: $T_{2M} = T_2 \times FS'$

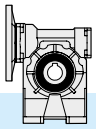

3.5 Dati tecnici

3.5 Technical data

3.5 Technische Daten

40	n_1 = 2800				KC					
	i_n	n_2 [min-1]	Rd	P_{t0}	T_2 [Nm]	P_1 [kW]	FS'	Input - IEC B5/B14		
	5	560	0.88	—	11.3	**0.75**	2.2	**71**	**63**	—
	7.5	373	0.87		17	**0.75**	1.8			
	10	280	0.86		22	**0.75**	1.4			
	15	187	0.82		32	**0.75**	1.0			
	20	140	0.80		30	**0.55**	1.0			
	25	112	0.76		24	**0.37**	1.1			
	30	93	0.73		28	**0.37**	1.3			
	40	70	0.70		24	**0.25**	1.4			
Kg 2.0	**50**	56	0.65		28	**0.25**	1.1	—		**56**
	65	43	0.61		24	**0.18**	1.2			
	80	35	0.58		21	**0.13**	1.3			
	100	28	0.55		24	**0.13**	1.0			

40	n_1 = 1400				KC					
	i_n	n_2 [min-1]	Rd	P_{t0}	T_2 [Nm]	P_1 [kW]	FS'	Input - IEC B5/B14		
	5	280	0.87	0.80	16.3	**0.55**	2.1	**71**	**63**	—
	7.5	187	0.85	0.80	24	**0.55**	1.7			
	10	140	0.83	0.70	31	**0.55**	1.3			
	15	93	0.79	0.50	30	**0.37**	1.4			
	20	70	0.76	0.50	38	**0.37**	1.0			
	25	56	0.72	0.40	31	**0.25**	1.1			
	30	47	0.68	0.40	35	**0.25**	1.2			
	40	35	0.64	0.30	38	**0.22**	1.0			
Kg 2.0	**50**	28	0.59	0.30	36	**0.18**	1.1	—		**56**
	65	22	0.54	0.20	31	**0.13**	1.1			
	80	18	0.52	0.20	31	**0.11**	1.1			
	100	14	0.49	0.20	30	**0.09**	0.9			

40	n_1 = 900				KC					
	i_n	n_2 [min-1]	Rd	P_{t0}	T_2 [Nm]	P_1 [kW]	FS'	Input - IEC B5/B14		
	5	180	0.85	—	16.7	**0.37**	2.5	**71**	**63**	—
	7.5	120	0.83		25	**0.37**	2.0			
	10	90	0.81		32	**0.37**	1.5			
	15	60	0.76		45	**0.37**	1.1			
	20	45	0.74		39	**0.25**	1.2			
	25	36	0.69		33	**0.18**	1.3			
	30	30	0.65		37	**0.18**	1.3			
	40	23	0.61		33	**0.13**	1.3			
Kg 2.0	**50**	18	0.55		38	**0.13**	1.1	—		**56**
	65	14	0.51		32	**0.09**	1.2			
	80	11	0.48		37	**0.09**	1.0			
	100	9	0.45		29	**0.06**	1.0			

40	n_1 = 500				KC					
	i_n	n_2 [min-1]	Rd	P_{t0}	T_2 [Nm]	P_1 [kW]	FS'	Input - IEC B5/B14		
	5	100	0.83	—	7.1	**0.09**	7.1	**71**	**63**	—
	7.5	67	0.81		10	**0.09**	5.5			
	10	50	0.79		14	**0.09**	4.4			
	15	33	0.73		19	**0.09**	3.1			
	20	25	0.70		24	**0.09**	2.3			
	25	20	0.65		28	**0.09**	1.7			
	30	17	0.61		31	**0.09**	1.8			
	40	13	0.57		39	**0.09**	1.3			
Kg 2.0	**50**	10	0.51		44	**0.09**	1.2	—		**56**
	65	8	0.46		52	**0.09**	0.9			
	80	6	0.44		61*	**0.09**	0.7*			
	100	5	0.41		71*	**0.09**	0.4*			

*** ATTENZIONE:** la coppia massima utilizzabile [T_{2M}] deve essere calcolata utilizzando il fattore di servizio: $T_{2M} = T_2 \times FS'$

**** WARNING:*** *Maximum allowable torque [T_{2M}] must be calculated using the following service factor : $T_{2M} = T_2 \times FS'$*

*** ACHTUNG:** das max. anwendbare Drehmoment [T_{2M}] muss mit folgendem Betriebsfaktor berechnet werden: $T_{2M} = T_2 \times FS'$

3.5 Dati tecnici

3.5 Technical data

3.5 Technische Daten

50	n_1 = 2800				KC					
	i_n	n_2 [min-1]	Rd	P_{t0}	T_2 [Nm]	P_1 [kW]	FS'	Input - IEC B5/B14		
	5	560	0.89	—	22.8	**1.5**	1.9	**80**	**71**	—
	7.5	373	0.88		34	**1.5**	1.5			
	10	280	0.86		44	**1.5**	1.2			
	15	187	0.84		47	**1.1**	1.2			
	20	140	0.81		42	**0.75**	1.4			
	25	112	0.78		50	**0.75**	1.0			
	30	93	0.75		42	**0.55**	1.3			
Kg	**40**	70	0.72		54	**0.55**	1.0			**63**
	50	56	0.68		43	**0.37**	1.3	—		
3.4	**65**	43	0.64		53	**0.37**	1.0			
	80	35	0.61		41	**0.25**	1.2			
	100	28	0.58		35	**0.18**	1.3			

50	n_1 = 1400				KC					
	i_n	n_2 [min-1]	Rd	P_{t0}	T_2 [Nm]	P_1 [kW]	FS'	Input - IEC B5/B14		
	5	280	0.87	1.2	26.7	**0.9**	2.3	**80**	**71**	—
	7.5	187	0.86	1.2	40	**0.9**	1.8			
	10	140	0.84	1.0	52	**0.9**	1.4			
	15	93	0.80	0.80	74	**0.9**	1.0			
	20	70	0.78	0.70	58	**0.55**	1.3			
	25	56	0.74	0.60	47	**0.37**	1.4			
	30	47	0.71	0.60	53	**0.37**	1.2			
Kg	**40**	35	0.67	0.50	68	**0.37**	1.0			**63**
	50	28	0.62	0.40	53	**0.25**	1.3	—		
3.4	**65**	22	0.58	0.40	64	**0.25**	1.0			
	80	18	0.54	0.40	53	**0.18**	1.1			
	100	14	0.51	0.30	45	**0.13**	1.2			

50	n_1 = 900				KC					
	i_n	n_2 [min-1]	Rd	P_{t0}	T_2 [Nm]	P_1 [kW]	FS'	Input - IEC B5/B14		
	5	180	0.85	—	33.8	**0.75**	2.2	**80**	**71**	—
	7.5	120	0.84		50	**0.75**	1.6			
	10	90	0.82		66	**0.75**	1.3			
	15	60	0.78		68	**0.55**	1.3			
	20	45	0.75		59	**0.37**	1.5			
	25	36	0.71		70	**0.37**	1.1			
	30	30	0.67		79	**0.37**	1.0			
Kg	**40**	23	0.63		67	**0.25**	1.1			**63**
	50	18	0.59		78	**0.25**	1.0	—		
3.4	**65**	14	0.54		67	**0.18**	1.1			
	80	11	0.51		56	**0.13**	1.2			
	100	9	0.47		45	**0.09**	1.3			

50	n_1 = 500				KC					
	i_n	n_2 [min-1]	Rd	P_{t0}	T_2 [Nm]	P_1 [kW]	FS'	Input - IEC B5/B14		
	5	100	0.84	—	14.3	**0.18**	6.4	**80**	**71**	—
	7.5	67	0.82		21	**0.18**	4.7			
	10	50	0.80		28	**0.18**	3.8			
	15	33	0.75		39	**0.18**	2.7			
	20	25	0.72		50	**0.18**	2.1			
	25	20	0.68		58	**0.18**	1.5			
	30	17	0.63		65	**0.18**	1.5			
Kg	**40**	13	0.59		81	**0.18**	1.2			**63**
	50	10	0.54		93	**0.18**	1.0	—		
3.4	**65**	8	0.50		56	**0.09**	1.5			
	80	6	0.46		63	**0.09**	1.2			
	100	5	0.43		74	**0.09**	0.8			

*** ATTENZIONE:** la coppia massima utilizzabile [T_{2M}] deve essere calcolata utilizzando il fattore di servizio: $T_{2M} = T_2 \times FS'$

**** WARNING:*** *Maximum allowable torque [T_{2M}] must be calculated using the following service factor : $T_{2M} = T_2 \times FS'$*

*** ACHTUNG:** das max. anwendbare Drehmoment [T_{2M}] muss mit folgendem Betriebsfaktor berechnet werden: $T_{2M} = T_2 \times FS'$

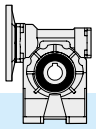

3.5 Dati tecnici

3.5 Technical data

3.5 Technische Daten

	n_1 = 2800				KC					
	i_n	n_2 [min-1]	Rd	P_{t0}	T_2 [Nm]	P_1 [kW]	FS'	Input - IEC B5/B14		
63	**5**	560	0.89	—	45.5	**3**	1.7	90	80	—
	7.5	373	0.88		68	**3**	1.3			
	10	280	0.87		89	**3**	1.1			
	15	187	0.84		95	**2.2**	1.0			
	20	140	0.83		85	**1.5**	1.3			
	25	112	0.81		76	**1.1**	1.2			
	30	93	0.77		87	**1.1**	1.3			
Kg	**40**	70	0.74		111	**1.1**	1.1	—		71
	50	56	0.70		90	**0.75**	1.1			
5.7	**65**	43	0.67		81	**0.55**	1.2			
	80	35	0.64		65	**0.37**	1.4			
	100	28	0.60		75	**0.37**	1.1			

	n_1 = 1400				KC					
	i_n	n_2 [min-1]	Rd	P_{t0}	T_2 [Nm]	P_1 [kW]	FS'	Input - IEC B5/B14		
63	**5**	280	0.88	1.8	54	**1.8**	2.0	90	80	—
	7.5	187	0.87	1.8	80	**1.8**	1.5			
	10	140	0.85	1.6	105	**1.8**	1.2			
	15	93	0.81	1.2	125	**1.5**	1.1			
	20	70	0.80	1.2	120	**1.1**	1.2			
	25	56	0.77	1.0	118	**0.9**	1.0			
	30	47	0.73	0.90	134	**0.9**	1.1			
Kg	**40**	35	0.69	0.80	142	**0.75**	1.1	—		71
	50	28	0.65	0.70	122	**0.55**	1.0			
5.7	**65**	22	0.61	0.60	100	**0.37**	1.2			
	80	18	0.58	0.60	79	**0.25**	1.4			
	100	14	0.53	0.50	91	**0.25**	1.1			

	n_1 = 900				KC					
	i_n	n_2 [min-1]	Rd	P_{t0}	T_2 [Nm]	P_1 [kW]	FS'	Input - IEC B5/B14		
63	**5**	180	0.87	—	69	**1.5**	1.9	90	80	—
	7.5	120	0.85		102	**1.5**	1.4			
	10	90	0.83		133	**1.5**	1.1			
	15	60	0.79		139	**1.1**	1.1			
	20	45	0.77		123	**0.75**	1.4			
	25	36	0.74		109	**0.55**	1.3			
	30	30	0.70		122	**0.55**	1.3			
Kg	**40**	23	0.66		154	**0.55**	1.1	—		71
	50	18	0.61		120	**0.37**	1.2			
5.7	**65**	14	0.57		98	**0.25**	1.4			
	80	11	0.54		115	**0.25**	1.1			
	100	9	0.50		95	**0.18**	1.2			

	n_1 = 500				KC					
	i_n	n_2 [min-1]	Rd	P_{t0}	T_2 [Nm]	P_1 [kW]	FS'	Input - IEC B5/B14		
63	**5**	100	0.85	—	20	**0.25**	8.3	90	80	—
	7.5	67	0.83		30	**0.25**	5.9			
	10	50	0.81		39	**0.25**	4.7			
	15	33	0.76		55	**0.25**	3.4			
	20	25	0.74		71	**0.25**	2.8			
	25	20	0.71		85	**0.25**	1.9			
	30	17	0.65		94	**0.25**	2.1			
Kg	**40**	13	0.62		118	**0.25**	1.7	—		71
	50	10	0.56		135	**0.25**	1.2			
5.7	**65**	8	0.52		163	**0.25**	1.0			
	80	6	0.50		137	**0.18**	1.1			
	100	5	0.45		77	**0.09**	1.6			

*** ATTENZIONE:** la coppia massima utilizzabile [T_{2M}] deve essere calcolata utilizzando il fattore di servizio: $T_{2M} = T_2 \times FS'$

**** WARNING:*** *Maximum allowable torque [T_{2M}] must be calculated using the following service factor : $T_{2M} = T_2 \times FS'$*

*** ACHTUNG:** das max. anwendbare Drehmoment [T_{2M}] muss mit folgendem Betriebsfaktor berechnet werden: $T_{2M} = T_2 \times FS'$

3.5 Dati tecnici / *3.5 Technical data* / 3.5 Technische Daten

	n_1 = 2800				KC					
	i_n	n_2 [min-1]	Rd	P_{t0}	T_2 [Nm]	P_1 [kW]	FS'	Input - IEC B5/B14		
75	**7.5**	373	0.89		125	**5.5**	1.0			
	10	280	0.88		120	**4**	1.2			
	15	187	0.85		131	**3**	1.2	**112 100**		—
	20	140	0.84		171	**3**	1.0			
	25	112	0.82		154	**2.2**	1.0			
	30	93	0.78	—	120	**1.5**	1.4		**90**	
Kg	**40**	70	0.75		154	**1.5**	1.2			
9.5	**50**	56	0.73		136	**1.1**	1.2			
	65	43	0.69		114	**0.75**	1.4	—		**80**
	80	35	0.66		135	**0.75**	1.1			
	100	28	0.62		159	**0.75**	0.8			

	n_1 = 1400				KC					
	i_n	n_2 [min-1]	Rd	P_{t0}	T_2 [Nm]	P_1 [kW]	FS'	Input - IEC B5/B14		
75	**7.5**	187	0.87	2.5	178	**4**	1.0			
	10	140	0.86	2.3	176	**3**	1.1			
	15	93	0.83	1.9	187	**2.2**	1.1	**112 100**		—
	20	70	0.81	1.7	199	**1.8**	1.1			
	25	56	0.78	1.5	200	**1.5**	1.0			
	30	47	0.74	1.2	167	**1.1**	1.3		**90**	
Kg	**40**	35	0.71	1.1	213	**1.1**	1.1			
9.5	**50**	28	0.67	1.0	206	**0.9**	1.0			
	65	22	0.63	0.90	154	**0.55**	1.3	—		**80**
	80	18	0.60	0.80	180	**0.55**	1.0			
	100	14	0.56	0.70	210	**0.55**	0.8			

	n_1 = 900				KC					
	i_n	n_2 [min-1]	Rd	P_{t0}	T_2 [Nm]	P_1 [kW]	FS'	Input - IEC B5/B14		
75	**7.5**	120	0.86		205	**3**	1.0			
	10	90	0.84		197	**2.2**	1.2			
	15	60	0.81		231	**1.8**	1.0	**112 100**		—
	20	45	0.78		250	**1.5**	1.1			
	25	36	0.76		221	**1.1**	1.1			
	30	30	0.71	—	249	**1.1**	1.0		**90**	
Kg	**40**	23	0.67		214	**0.75**	1.3			
9.5	**50**	18	0.64		186	**0.55**	1.3			
	65	14	0.59		151	**0.37**	1.5	—		**80**
	80	11	0.56		177	**0.37**	1.2			
	100	9	0.52		203	**0.37**	0.9			

	n_1 = 500				KC					
	i_n	n_2 [min-1]	Rd	P_{t0}	T_2 [Nm]	P_1 [kW]	FS'	Input - IEC B5/B14		
75	**7.5**	67	0.84		90	**0.75**	2.9			
	10	50	0.82		118	**0.75**	2.4			
	15	33	0.78		167	**0.75**	1.7	**112 100**		—
	20	25	0.75		216	**0.75**	1.5			
	25	20	0.72		260	**0.75**	1.1			
	30	17	0.67	—	288	**0.75**	1.1		**90**	
Kg	**40**	13	0.63		265	**0.55**	1.2			
9.5	**50**	10	0.59		210	**0.37**	1.3			
	65	8	0.55		251	**0.37**	1.0	—		**80**
	80	6	0.52		197	**0.25**	1.2			
	100	5	0.47		161	**0.18**	1.3			

* **ATTENZIONE:** la coppia massima utilizzabile [T_{2M}] deve essere calcolata utilizzando il fattore di servizio: $T_{2M} = T_2 \times FS'$

* ***WARNING:*** *Maximum allowable torque [T_{2M}] must be calculated using the following service factor : $T_{2M} = T_2 \times FS'$*

* **ACHTUNG:** das max. anwendbare Drehmoment [T_{2M}] muss mit folgendem Betriebsfaktor berechnet werden: $T_{2M} = T_2 \times FS'$

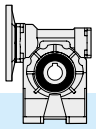

3.5 Dati tecnici

3.5 Technical data

3.5 Technische Daten

	n_1 = 2800				KC					
	i_n	n_2 [min-1]	Rd	P_{t0}	T_2 [Nm]	P_1 [kW]	FS'	Input - IEC B5/B14		
90	7.5	373	0.89		171	7.5	1.2			
	10	280	0.88		165	5.5	1.3			
	15	187	0.86		241	5.5	1.0	112 100		
	20	140	0.84		230	4	1.2			—
	25	112	0.83		212	3	1.2			
	30	93	0.79	—	243	3	1.1		90	
Kg	40	70	0.77		230	2.2	1.3			
	50	56	0.74		278	2.2	1.0			
16.4	65	43	0.71		235	1.5	1.1	—		
	80	35	0.68		205	1.1	1.2			80
	100	28	0.64		163	0.75	1.3			

	n_1 = 1400				KC					
	i_n	n_2 [min-1]	Rd	P_{t0}	T_2 [Nm]	P_1 [kW]	FS'	Input - IEC B5/B14		
90	7.5	187	0.88	3.0	247	5.5	1.2			
	10	140	0.86	2.5	236	4	1.3			
	15	93	0.84	2.2	256	3	1.2	112 100		
	20	70	0.82	2.0	334	3	1.1			—
	25	56	0.80	1.8	299	2.2	1.1			
	30	47	0.76	1.5	340	2.2	1.0		90	
Kg	40	35	0.72	1.3	355	1.8	1.1			
	50	28	0.69	1.1	353	1.5	1.0			
16.4	65	22	0.65	1.0	317	1.1	1.0	—		
	80	18	0.63	1.0	309	0.9	1.0			80
	100	14	0.58	0.80	217	0.55	1.2			

	n_1 = 900				KC					
	i_n	n_2 [min-1]	Rd	P_{t0}	T_2 [Nm]	P_1 [kW]	FS'	Input - IEC B5/B14		
90	7.5	120	0.86		206	3	1.7			
	10	90	0.85		270	3	1.3			
	15	60	0.82		286	2.2	1.3	112 100		
	20	45	0.79		371	2.2	1.1			—
	25	36	0.77		369	1.8	1.0			
	30	30	0.73	—	416	1.8	1.0		90	
Kg	40	23	0.69		440	1.5	1.0			
	50	18	0.66		384	1.1	1.0			
16.4	65	14	0.62		319	0.75	1.1	—		
	80	11	0.59		274	0.55	1.2			80
	100	9	0.54		313	0.55	1.0			

	n_1 = 500				KC					
	i_n	n_2 [min-1]	Rd	P_{t0}	T_2 [Nm]	P_1 [kW]	FS'	Input - IEC B5/B14		
90	7.5	67	0.84		91	0.75	4.7			
	10	50	0.83		118	0.75	3.7			
	15	33	0.79		169	0.75	2.7	112 100		
	20	25	0.76		219	0.75	2.3			—
	25	20	0.74		265	0.75	1.7			
	30	17	0.68	—	294	0.75	1.6		90	
Kg	40	13	0.65		371	0.75	1.4			
	50	10	0.61		439	0.75	1.1			
16.4	65	8	0.57		388	0.55	1.1	—		
	80	6	0.54		305	0.37	1.3			80
	100	5	0.49		344	0.37	1.0			

*** ATTENZIONE:** la coppia massima utilizzabile [T_{2M}] deve essere calcolata utilizzando il fattore di servizio: $T_{2M} = T_2 \times FS'$

**** WARNING:** Maximum allowable torque [T_{2M}] must be calculated using the following service factor : $T_{2M} = T_2 \times FS'$*

*** ACHTUNG:** das max. anwendbare Drehmoment [T_{2M}] muss mit folgendem Betriebsfaktor berechnet werden: $T_{2M} = T_2 \times FS'$

3.5 Dati tecnici

3.5 Technical data

3.5 Technische Daten

	n_1 = 2800				KC					
	i_n	n_2 [min-1]	Rd	P_{t0}	T_2 [Nm]	P_1 [kW]	FS'	Input - IEC B5/B14		
110	**7.5**	373	0.89	—	343	**15**	1.0	132	112 100	—
	10	280	0.88		332	**11**	1.1			
	15	187	0.86		331	**7.5**	1.2			
	20	140	0.85		435	**7.5**	1.1			
	25	112	0.84		393	**5.5**	1.1			
	30	93	0.80		450	**5.5**	1.0			
Kg	**40**	70	0.78		424	**4**	1.2	—		**90**
	50	56	0.76		388	**3**	1.2			—
31.5	**65**	43	0.73		354	**2.2**	1.2			**90**
	80	35	0.70		287	**1.5**	1.4			
	100	28	0.66		339	**1.5**	1.1			

	n_1 = 1400				KC					
	i_n	n_2 [min-1]	Rd	P_{t0}	T_2 [Nm]	P_1 [kW]	FS'	Input - IEC B5/B14		
110	**7.5**	187	0.88	4.3	415	**9.2**	1.2	132	112 100	—
	10	140	0.87	4.0	446	**7.5**	1.1			
	15	93	0.84	3.2	475	**5.5**	1.1			
	20	70	0.83	3.0	623	**5.5**	1.0			
	25	56	0.81	2.7	554	**4**	1.0			
	30	47	0.77	2.2	472	**3**	1.3			
Kg	**40**	35	0.74	2.0	606	**3**	1.1	—		**90**
	50	28	0.72	1.8	538	**2.2**	1.1			—
31.5	**65**	22	0.68	1.6	451	**1.5**	1.2			**90**
	80	18	0.65	1.5	390	**1.1**	1.3			
	100	14	0.61	1.3	458	**1.1**	1.0			

	n_1 = 900				KC					
	i_n	n_2 [min-1]	Rd	P_{t0}	T_2 [Nm]	P_1 [kW]	FS'	Input - IEC B5/B14		
110	**7.5**	120	0.87	—	381	**5.5**	1.5	132	112 100	—
	10	90	0.86		500	**5.5**	1.2			
	15	60	0.83		526	**4**	1.2			
	20	45	0.81		685	**4**	1.1			
	25	36	0.79		628	**3**	1.1			
	30	30	0.74		520	**2.2**	1.3			
Kg	**40**	23	0.71		664	**2.2**	1.1	—		**90**
	50	18	0.68		653	**1.8**	1.1			—
31.5	**65**	14	0.64		487	**1.1**	1.2			**90**
	80	11	0.61		570	**1.1**	1.0			
	100	9	0.57		450	**0.75**	1.1			

	n_1 = 500				KC					
	i_n	n_2 [min-1]	Rd	P_{t0}	T_2 [Nm]	P_1 [kW]	FS'	Input - IEC B5/B14		
110	**7.5**	67	0.85	—	183	**1.5**	3.9	132	112 100	—
	10	50	0.84		240	**1.5**	3.1			
	15	33	0.80		344	**1.5**	2.3			
	20	25	0.78		446	**1.5**	1.9			
	25	20	0.76		542	**1.5**	1.5			
	30	17	0.70		603	**1.5**	1.4			
Kg	**40**	13	0.67		765	**1.5**	1.2	—		**90**
	50	10	0.64		671	**1.1**	1.2			—
31.5	**65**	8	0.59		553	**0.75**	1.3			**90**
	80	6	0.56		643	**0.75**	1.0			
	100	5	0.52		542	**0.55**	1.1			

*** ATTENZIONE:** la coppia massima utilizzabile [T_{2M}] deve essere calcolata utilizzando il fattore di servizio: $T_{2M} = T_2 \times FS'$

**** WARNING:*** *Maximum allowable torque [T_{2M}] must be calculated using the following service factor : $T_{2M} = T_2 \times FS'$*

*** ACHTUNG:** das max. anwendbare Drehmoment [T_{2M}] muss mit folgendem Betriebsfaktor berechnet werden: $T_{2M} = T_2 \times FS'$

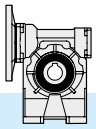

3.5 Dati tecnici

3.5 Technical data

3.5 Technische Daten

	n_1 = 2800				KC					
	i_n	n_2 [min-1]	Rd	P_{t0}	T_2 [Nm]	P_1 [kW]	FS'	Input - IEC B5/B14		
130	7.5	373	0.90	—	345	15	1.5	132	112 100	—
	10	280	0.89		455	15	1.2			
	15	187	0.87		490	11	1.3			
	20	140	0.86		645	11	1.1			
	25	112	0.85		667	9.2	1.1			
	30	93	0.81		622	7.5	1.2			
Kg 45	40	70	0.80		819	7.5	1.0			
	50	56	0.78		732	5.5	1.0	—		
	65	43	0.75		499	3	1.3			90
	80	35	0.73		598	3	1.1			
	100	28	0.70		525	2.2	1.1			

	n_1 = 1400				KC					
	i_n	n_2 [min-1]	Rd	P_{t0}	T_2 [Nm]	P_1 [kW]	FS'	Input - IEC B5/B14		
130	7.5	187	0.89	6.0	418	9.2	1.8	132	112 100	—
	10	140	0.88	5.5	552	9.2	1.4			
	15	93	0.85	4.4	803	9.2	1.1			
	20	70	0.84	4.1	860	7.5	1.1			
	25	56	0.83	3.9	778	5.5	1.2			
	30	47	0.79	3.2	883	5.5	1.1			
Kg 45	40	35	0.76	2.8	829	4	1.3			
	50	28	0.74	2.6	757	3	1.3	—		
	65	22	0.71	2.3	678	2.2	1.2			90
	80	18	0.68	2.1	649	1.8	1.2			
	100	14	0.64	1.8	655	1.5	1.1			

	n_1 = 900				KC					
	i_n	n_2 [min-1]	Rd	P_{t0}	T_2 [Nm]	P_1 [kW]	FS'	Input - IEC B5/B14		
130	7.5	120	0.88	—	385	5.5	2.3	132	112 100	—
	10	90	0.87		508	5.5	1.8			
	15	60	0.84		735	5.5	1.4			
	20	45	0.82		957	5.5	1.2			
	25	36	0.81		860	4	1.3			
	30	30	0.76		968	4	1.2			
Kg 45	40	23	0.73		930	3	1.3			
	50	18	0.70		817	2.2	1.3	—		
	65	14	0.67		832	1.8	1.1			90
	80	11	0.64		815	1.5	1.1			
	100	9	0.60		700	1.10	1.2			

	n_1 = 500				KC					
	i_n	n_2 [min-1]	Rd	P_{t0}	T_2 [Nm]	P_1 [kW]	FS'	Input - IEC B5/B14		
130	7.5	67	0.86	—	228	1.85	4.9	132	112 100	—
	10	50	0.84		297	1.85	3.7			
	15	33	0.81		429	1.85	2.9			
	20	25	0.79		558	1.85	2.5			
	25	20	0.78		689	1.85	1.8			
	30	17	0.72		763	1.85	1.7			
Kg 45	40	13	0.69		975	1.85	1.5			
	50	10	0.66		1166	1.85	1.1	—		
	65	8	0.63		860	1.10	1.3			90
	80	6	0.59		992	1.10	1.1			
	100	5	0.55		788	0.75	1.2			

*** ATTENZIONE:** la coppia massima utilizzabile [T_{2M}] deve essere calcolata utilizzando il fattore di servizio: $T_{2M} = T_2 \times FS'$

**** WARNING:*** *Maximum allowable torque [T_{2M}] must be calculated using the following service factor : $T_{2M} = T_2 \times FS'$*

*** ACHTUNG:** das max. anwendbare Drehmoment [T_{2M}] muss mit folgendem Betriebsfaktor berechnet werden: $T_{2M} = T_2 \times FS'$

3.6 **Momenti d' inerzia** [Kg·cm²] (riferiti all'albero veloce in entrata)

3.6 ***Moments of inertia*** *[Kg·cm²] (referred to input shaft)*

3.6 **Trägheitsmoment** [Kg·cm²] (bez. Antriebswelle)

	i_n	KC B5 - B14	
		IEC 56	IEC 63
K30	5	0.130	0.127
	7.5	0.112	0.109
	10	0.103	0.100
	15	0.097	0.094
	20	0.095	0.092
	25	0.094	0.091
	30	0.093	0.090
	40	0.093	0.090
	50	0.092	0.089
	65	0.079	-
	80	0.079	-
	100	0.078	-

	i_n	KC B5 - B14		
		IEC 56	IEC 63	IEC 71
K40	5	-	0.391	0.463
	7.5	-	0.321	0.356
	10	-	0.272	0.347
	15	-	0.266	0.340
	20	-	0.263	0.338
	25	-	0.262	0.337
	30	-	0.262	0.337
	40	-	0.261	0.336
	50	0.182	0.261	-
	65	0.182	0.261	-
	80	0.182	0.261	-
	100	0.182	0.261	-

	i_n	KC B5 - B14		
		IEC 63	IEC 71	IEC 80
K50	5	-	0.922	1.046
	7.5	-	0.684	0.935
	10	-	0.602	0.853
	15	-	0.543	0.794
	20	-	0.523	0.774
	25	-	0.513	0.764
	30	-	0.508	0.759
	40	0.315	0.503	-
	50	0.313	0.501	-
	65	0.311	0.499	-
	80	0.310	0.498	-
	100	0.309	0.498	-

	i_n	KC B5 - B14		
		IEC 71	IEC 80	IEC 63
K63	5	-	2.431	2.671
	7.5	-	1.949	2.269
	10	-	1.744	2.063
	15	-	1.597	1.916
	20	-	1.545	1.864
	25	-	1.514	1.833
	30	-	1.508	1.828
	40	0.966	1.495	-
	50	0.959	1.488	-
	65	0.955	1.484	-
	80	0.953	1.482	-
	100	0.952	1.481	-

3.6 **Momenti d' inerzia** [Kg·cm²] (riferiti all'albero veloce in entrata)

3.6 ***Moments of inertia*** *[Kg·cm²] (referred to input shaft)*

3.6 **Trägheitsmoment** [Kg·cm²] (bez. Antriebswelle)

	i_n	KC B5 - B14		
		IEC 80	IEC 90	IEC 100-112
K75	7.5	-	3.712	4.462
	10	-	3.234	3.984
	15	-	2.893	3.643
	20	-	2.774	3.523
	25	-	2.709	3.458
	30	-	2.689	3.438
	40	1.595	2.659	-
	50	1.578	2.642	-
	65	1.569	2.633	-
	80	1.565	2.629	-
	100	1.562	2.626	-

	i_n	KC B5 - B14		
		IEC 80	IEC 90	IEC 100-112
K90	7.5		6.898	7.671
	10	-	5.875	6.648
	15	-	5.144	5.917
	20	-	3.398	5.661
	25	-	3.256	5.520
	30	-	3.215	5.479
	40	-	3.151	-
	50	-	3.115	-
	65	2.024	3.096	-
	80	2.014	3.087	-
	100	2.008	3.080	-

	i_n	KC B5 - B14		
		IEC 90	IEC 100-112	IEC 132
K110	7.5	-	17.980	20.038
	10	-	15.119	17.177
	15	-	13.076	15.134
	20	-	8.367	14.418
	25	-	7.969	14.020
	30	-	11.850	13.908
	40	-	7.677	-
	50	-	7.578	-
	65	5.592	7.510	-
	80	5.570	7.489	-
	100	5.555	7.474	-

	i_n	KC B5 - B14		
		IEC 90	IEC 100-112	IEC 132
K130	7.5	-	40.70	42.78
	10	-	32.96	35.04
	15	-	27.43	29.51
	20	-	16.68	27.58
	25	-	15.52	26.42
	30	-	24.12	26.20
	40	-	14.81	25.71
	50	-	12.57	-
	65	10.46	14.35	-
	80	10.41	14.30	-
	100	10.37	14.26	-

3.7 Dimensioni

3.7 Dimensions

3.7 Abmessungen

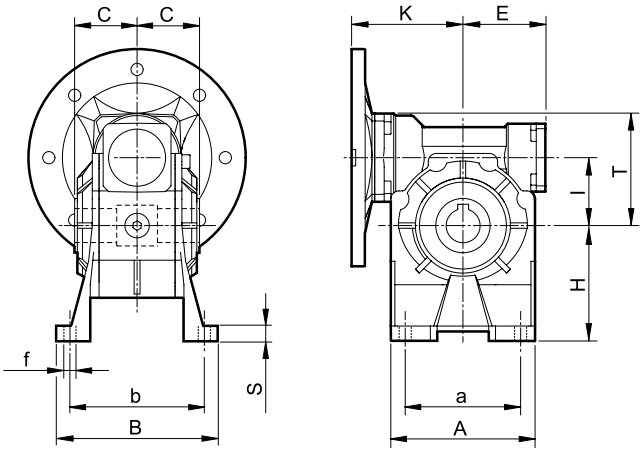

KC..A

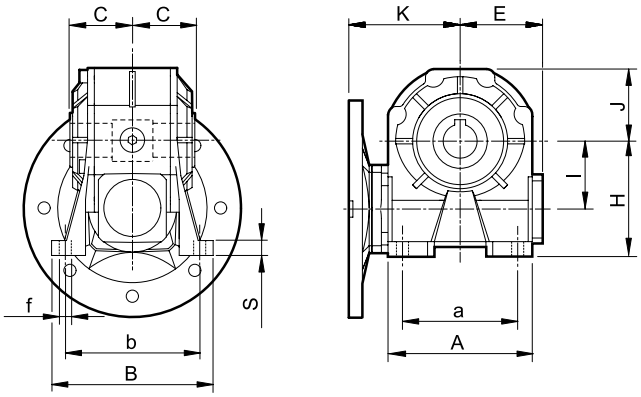

KC..B

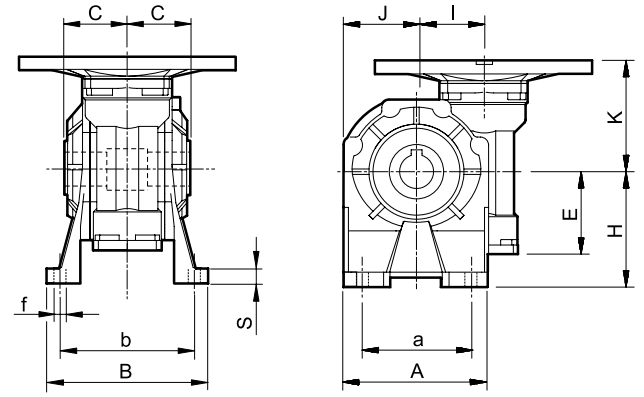

KC..V

	30	40	50	63	75	90	110	130
b2	**5**	**6** (6)	**8** (8)	**8**	**8** (8)	**10**	**12**	**14**
C	31.5	39	46	56	60	70	77.5	85
D2 H7	**14**	**18** (19)	**25** (24)	**25**	**28** (30)	**35**	**42**	**45** (48)
E	41	51	60	71	85	103	127.5	147.5
G h8	55	60	70	80	95	110	130	180
I	31.5	40	50	63	75	90	110	130
J	37.5	43.5	53.5	64	78	100	122	131
K	57	75	82	97	114	122	153	173
M	M6x8	M6x10	M8x10	M8x14	M8x14	M10x18	M10x18	M12x20
Pp	29	36.5	43.5	53	57	67	74	81
R	65	75	85	95	115	130	165	215
T	52.5	68.5	82.5	100.5	116.5	131.5	161.5	181
t2	16.3	20.8 (21.8)	28.3 (27.3)	28.3	31.3 (33.3)	38.3	45.3	48.8 (51.8)
X	1.5	1.5	1.5	2	2	2	2.5	3

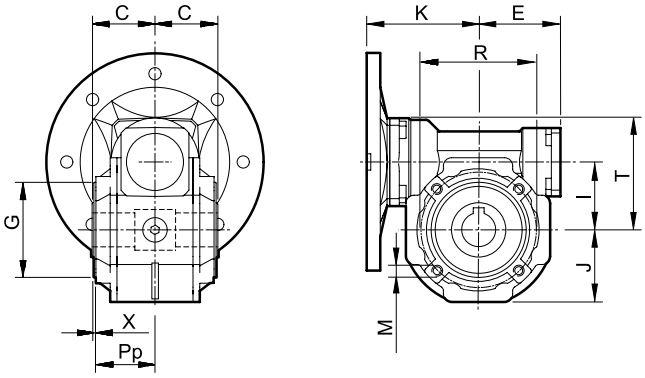

Flangia pendolare / *Side cover for shaft mounting* / Aufsteckflansch

	Piedi *Feet* Füß	30	40	50	63	75	90	110	130
A	1	67	86.5	106	127.5	155.5	190	250	295
	2	67	86.5	106			190	250	
a	1	40-52	70	63-85	95	120	140	200	235
	2	40-52	52	63-85			140	200	220
B	1	78	98	119	136	140	168	210	229
	2	78	98	119			168	210	
b	1	66	84	99	111	115	140	162	190
	2	66	81	99			146	181	191
f	1	6.5	7	9	11	11	13	13	15
	2	6.5	8.5	9			11	13	
H	1	52	71	85	100	115	135	172	200
	2	55	72	82			142	170	195
S	1	5	9	11	12	12	14	17	20
	2	8	10	8			14	15	15

30

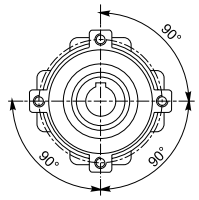

4

Fori / *Holes* / Bohrungen

40 - 50

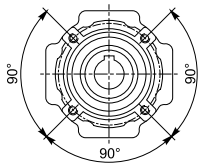

4

Fori / *Holes* / Bohrungen

63 - 75 - 90 - 110 - 130

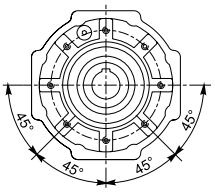

8

Fori / *Holes* / Bohrungen

KC..P

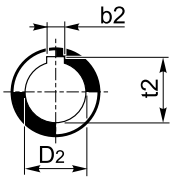

Albero uscita cavo
Hollow output shaft
Abtriebshohlwelle

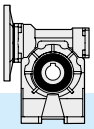

3.7 Dimensioni — *3.7 Dimensions* — 3.7 Abmessungen

Flangia uscita / *Output flange* / Abtriebsflansch

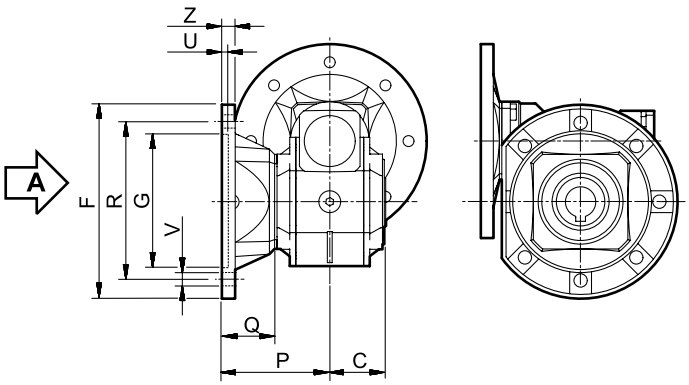

KC..F

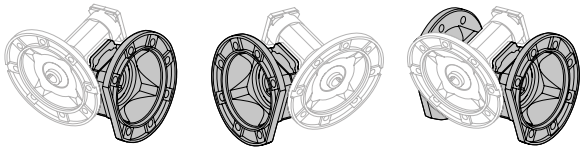

F...D Standard — **F...S** — **F...2**

Vista da A / *View from A* / Ansicht von A

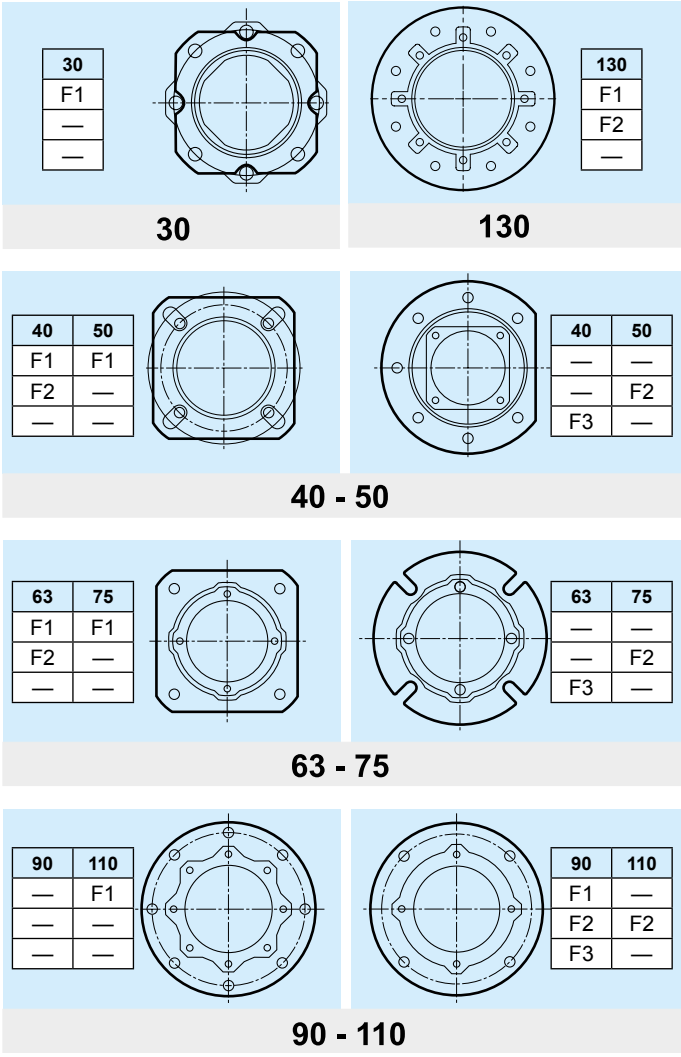

KC		C	F		G H8	P	Q	R	U	V		Ø	Z
30	F1	31.5		66	50	54.5	23	68	4	n° 4		6.5	6
	F2												
	F3												
40	F1	39		85	60	67	28	75-90	4	n° 4		9	8
	F2			85	60	97	58	75-90	4	n° 4		9	8
	F3		140		95	80	41	115	5		n° 7	9	10
50	F1	46		94	70	90	44	85-100	5	n° 4		11	10
	F2		160		110	89	43	130	5		n° 7	11	11
	F3												
63	F1	56		142	115	82	26	150	5	n° 4		11	11
	F2			142	115	112	56	150	5	n° 4		11	11
	F3		160		110	80.5	24.5	130	5	n° 4		11	12
75	F1	60		160	130	111	51	165	5	n° 4		13	12
	F2		160		110	90	30	130	6	n° 4		11	13
	F3												
90	F1	70	200		152	111	41	175	5	n° 4		13	12
	F2		200		152	151	81	175	5	n° 4		13	13
	F3		200		130	110	40	165	6	n° 4		11	11
110	F1	77.5	260		170	131	53.5	230	6		n° 8	13	15
	F2		250		180	150	72.5	215	5	n° 4		15	16
	F3												
130	F1	85	320		180	140	55	255	7		n° 8 *	16	16
	F2		300		230			265					
	F3												

* Foratura ruotata di 22.5° — * *Drilling turned of 22.5°* — * Durchbohrung 22.5° versetzt

3.7 Dimensioni

3.7 Dimensions

3.7 Abmessungen

Flangia entrata / *Input flange* / Antriebsflansch

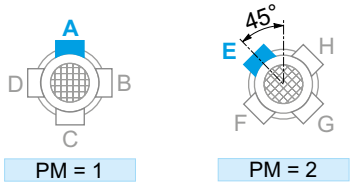

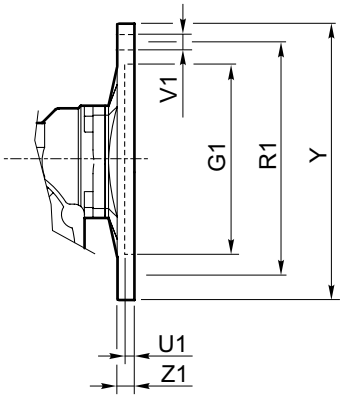

KC	IEC	G_1 H7	PM 1	PM 2	R_1	U_1	V_1 Ø	V_1	V_1	Y	Z_1	Diametro fori PAM / *Holes diameter IEC* / IEC Durchmesser 5	7.5	10	15	20	25	30	40	50	65	80	100
30	56 B5	80	•	•	100	4	7	8		120	8	9	9	9	9	9	9	9	9	9	9	9	9
	56 B14	50	•	•	65	3.5	6	8		80	8	9	9	9	9	9	9	9	9	9	9	9	9
	63 B5	95	•	•	115	4	9	8		140	8	11	11	11	11	11	11	11	11	11	/	/	/
	63 B14	60	•	•	75	4	6	8		90	8	11	11	11	11	11	11	11	11	11	/	/	/
40	56 B5	80	•	•	100	4	7	8		120	9	/	/	/	/	/	/	/	/	9	9	9	9
	56 B14	50		•	65	3.5	6		4	80	8	/	/	/	/	/	/	/	/	9	9	9	9
	63 B5	95	•	•	115	4	9	8		140	9	11	11	11	11	11	11	11	11	11	11	11	11
	63 B14	60		•	75	3.5	6		4	90	8	11	11	11	11	11	11	11	11	11	11	11	11
	71 B5	110	•	•	130	4.5	9	8		160	10	14	14	14	14	14	14	14	14	/	/	/	/
	71 B14	70	•	•	85	3.5	7	8		105	8	14	14	14	14	14	14	14	14	/	/	/	/
50	63 B5	95	•	•	115	4	9	8		140	9	/	/	/	/	/	/	/	11	11	11	11	11
	63 B14	60		•	75	3.5	6		4	90	8	/	/	/	/	/	/	/	11	11	11	11	11
	71 B5	110	•	•	130	4.5	9	8		160	10	14	14	14	14	14	14	14	14	14	14	14	14
	71 B14	70		•	85	3.5	7	(n° 8)*	4	105	8	14	14	14	14	14	14	14	14	14	14	14	14
	80 B5	130	•	•	165	4.5	11	8		200	10	19	19	19	19	19	19	19	19	/	/	/	/
	80 B14	80	•	•	100	4	7	8		120	10	19	19	19	19	19	19	19	19	/	/	/	/
63	71 B5	110	•	•	130	4.5	9	8		160	10	/	/	/	/	/	/	/	14	14	14	14	14
	71 B14	70		•	85	3.5	7		4	105	10	/	/	/	/	/	/	/	14	14	14	14	14
	80 B5	130	•	•	165	4.5	11	8		200	10	19	19	19	19	19	19	19	19	19	19	19	19
	80 B14	80		•	100	4	7		4	120	10	19	19	19	19	19	19	19	19	19	19	19	19
	90 B5	130	•	•	165	4.5	11	8		200	10	24	24	24	24	24	24	24	/	/	/	/	/
	90 B14	95	•	•	115	4	8.5	8		140	10	24	24	24	24	24	24	24	/	/	/	/	/
75	80 B5	130	•	•	165	4.5	11	8		200	10	/	/	/	/	/	/	19	19	19	19	19	19
	80 B14	80		•	100	4	7		4	120	11	/	/	/	/	/	/	19	19	19	19	19	19
	90 B5	130	•	•	165	4.5	11	8		200	10	/	24	24	24	24	24	24	24	24	24	24	24
	90 B14	95		•	115	4	9		4	140	11	/	24	24	24	24	24	24	24	24	24	24	24
	100/112 B5	180	•	•	215	5	14	8		250	13	/	28	28	28	28	28	28	/	/	/	/	/
	100/112 B14	110	•	•	130	4.5	9	8		160	11	/	28	28	28	28	28	28	/	/	/	/	/
90	80 B5	130	•	•	165	4.5	11	8		200	10	/	/	/	/	/	/	/	/	/	19	19	19
	80 B14	80		•	100	4	7		4	120	11	/	/	/	/	/	/	/	/	/	19	19	19
	90 B5	130	•	•	165	4.5	11	8		200	10	/	24	24	24	24	24	24	24	24	24	24	24
	90 B14	95		•	115	4	9		4	140	11	/	24	24	24	24	24	24	24	24	24	24	24
	100/112 B5	180	•	•	215	5	14	8		250	13	/	28	28	28	28	28	28	/	/	/	/	/
	100/112 B14	110	•	•	130	4.5	9	8		160	11	/	28	28	28	28	28	28	/	/	/	/	/
110	90 B5	130	•		165	5	11	4		200	12	/	/	/	/	/	/	/	24	/	24	24	24
	90 B14	95		•	115	5	9		4	140	12	/	/	/	/	/	/	/	24	/	24	24	24
	100/112 B5	180	•		215	5	14	4		250	14	/	28	28	28	28	28	28	28	28	28	28	28
	100/112 B14	110		•	130	5	9		4	160	12	/	28	28	28	28	28	28	28	28	28	28	28
	132 B5	230	•		265	5	14	4		300	14	/	38	38	38	38	38	38	/	/	/	/	/
	132 B14	130	•		165	5	11	4		200	12	/	38	38	38	38	38	38	/	/	/	/	/
130	90 B5	130	•		165	5	11	4		200	12	/	/	/	/	/	/	/	/	/	24	24	24
	90 B14	95		•	115	5	9		4	140	12	/	/	/	/	/	/	/	/	/	24	24	24
	100/112 B5	180	•		215	5	14	4		250	14	/	28	28	28	28	28	28	28	28	28	28	28
	100/112 B14	110		•	130	5	9		4	160	12	/	28	28	28	28	28	28	28	28	28	28	28
	132 B5	230	•		265	5	14	4		300	14	/	38	38	38	38	38	38	38	/	/	/	/
	132 B14	130	•		165	5	11	4		200	12	/	38	38	38	38	38	38	38	/	/	/	/

* A richiesta, solo con corpo speciale / *Upon request, only with special body* / Auf Wunsch nur mit speziellen Körper

N.B.: Il montaggio STD di P_M=2 solo quando non è possibile il montaggio STD di P_M=1.
N.B.: E' possibile realizzare anche tutte le composizioni ibride ottenibili dalle flange esistenti.

N.B.: STD mounting of P_M=2 only if STD mounting of P_M=1 is not possible.
N.B.: it is possible to create hybrid combinations with the existing flanges.

ANMERKUNG: STD Montage von P_M=2 nur wenn STD Montage von P_M=1 unmöglich ist.
ANMERKUNG: Mischkombinationen mit der verfügbaren Flanschen sind möglich.

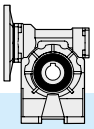

3.8 Entrata supplementare (vite bisporgente)

3.8 Additional input (double extended shaft)

3.8 Zusatzantrieb (beidseitige Welle)

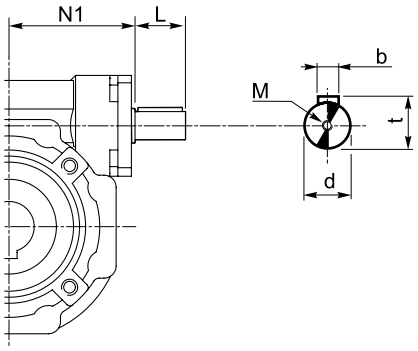

S.e.A.

KC	d j6	L	M	N1	b	t
30	9	15	M4x10	42.5	3	10.2
40	11	20	M4x12	52.5	4	12.5
50	14	25	M5x13	62.5	5	16
63	19	30	M8x20	72.5	6	21.5
75	24	40	M8x20	89	8	27
90	24	40	M8x20	108	8	27
110	28	50	M8x20	132.5	8	31
130	38	70	M10x25	152	10	41

3.9 Limitatore di coppia cavo passante

Il limitatore di coppia viene consigliato in tutte quelle applicazioni che richiedono una limitazione sulla coppia trasmissibile per proteggere l'impianto e/o preservare il riduttore evitando sovraccarichi o urti indesiderati quanto inaspettati.
È un dispositivo con albero dotato di cavo passante, con funzionamento a frizione, ed è integrato al riduttore, presentando un ingombro limitato.
Concepito per lavorare a bagno d'olio, il dispositivo risulta affidabile nel tempo ed è esente da usura se non viene mantenuto in condizioni prolungate di slittamento (condizione che si verifica quando la coppia presenta valori superiori a quelli di taratura).
La taratura è facilmente regolabile dall'esterno attraverso il serraggio di una ghiera autobloccante che porta a compressione le 4 molle a tazza disposte tra loro in serie.
Il dispositivo non consente:
- l'impiego di cuscinetti a rulli conici in uscita
- funzionamento prolungato in condizioni di slittamento.

Nella tabella seguente vengono riportati i valori delle coppie di slittamento M_{2S} in funzione del n° di giri della ghiera.
I valori di taratura presentano una tolleranza del ±10% e si riferiscono ad una condizione statica.
In condizioni dinamiche è da notare che la coppia di slittamento assume valori diversi a seconda del tipo e/o modalità in cui si verifica il sovraccarico: con valori maggiori in caso di carico uniformemente crescente rispetto a volori più contenuti in seguito al verificarsi di picchi improvvisi di carico.
NOTA: quando si supera il valore di taratura si ha slittamento. Il coefficiente di attrito tra le superfici di contatto da statico diventa dinamico e la coppia trasmessa cala del 30% circa.
E' quindi opportuno prevedere uno stop per poter ripartire al valore di taratura iniziale.

3.9 Torque limiter with through hollow shaft

The use of a torque limiter is advisable when the application requires the limitation of the transmissible torque to safeguard the plant and/or the gearbox from unexpected or undesired overloads.
The torque limiter is equipped with a through hollow shaft and a friction clutch. It is integrated in the gearbox, therefore space requirement is limited.
Designed to be working in oil bath, the device is reliable over time and is not subject to wear unless in case of operation with prolonged slipping (it occurs when the torque values are higher than the calibration values).
Calibration can be easily adjusted from outside by tightening the self-locking ring nut, which causes the compression of the 4 Belleville washers arranged in series.

The device does not go together with:
- *the use of tapered roller bearings at output*
- *prolonged operation under slipping conditions*

The following table shows the values of M_{2S} slipping torques depending on the number of revolutions of the ring nut.
Calibration values feature a ±10% tolerance and refer to static conditions.
Under dynamic conditions the values of the slipping torque will change according to the type of overload: the values are higher if the load increase is uniform; the values are lower if sudden load peaks occur.

***NOTE:** Slipping occurs when the setting values are exceeded.*
The friction coefficient between the contact surfaces from static becomes dynamic and the transmitted torque is approx. 30% lower.
It is advisable to have a stop first in order to have a restart based on the initial setting value.

3.9 Drehmomentbegrenzer mit durchgehender Hohlwelle

Die Anwendung eines Drehmomentbegrenzers wird empfohlen, um die Anlage und/oder das Getriebe gegen ungewünschte und unerwartete Überbelastungen zu schützen.
Es handelt sich um eine Vorrichtung mit einer durchgehender Hohlwelle.
Er ist in dem Getriebe integriert, d.h. der Raumbedarf ist klein. Der Begrenzer wurde für Betrieb in einem Ölbad entworfen.
Er ist zuverläßig über Zeit und verschleissfest (aussen wenn Rutschen für lange Zeit besteht: das passiert, wenn das Drehmoment höher als der Eichwert ist).
Die Einstellung darf mühelos von aussen durch das Anziehen einer selbstsperrenden Mutter ausgeführt werden. Das Anziehen verursacht die Zusammendrückung der 4 wechselsinniggeschichteten Tellerfeder.

Die Vorrichtung sieht das folgende nicht vor:
- die Verwendung von Kegelrollenlager am Abtrieb
- Längerer Rutschbetrieb

Die nachstehende Tabelle zeigt die Werte der Rutschmomente M_{2S} abhängig von der Zahl der Umdrehungen der Mutter.
Die Eichwerte weisen ±10% Toleranz auf und beziehen sich auf statische Bedingungen.
Unter dynamischen Bedingungen hat das Rutschmoment verschiedene Werte je nach Art der Überbelastung. Die Werte sind hoher, wenn die Belastung gleichmäßig zunimmt; sie sind niedriger im Falle von plötzlichen Belastungsspitzen.
BEMERKUNG: Rutschen tritt auf, wenn die eingestellten Werte überschritten werden. Der Reibungsfaktor zwischen den Berüehrungsflächen wird dynamisch anstatt statisch und das übertragene Drehmoment sinkt um ca. 30%.
Es ist daher ratsam, vor dem erneuten Anfahren anzuhalten, um die ursprünglichen Drehmomentwerte zu erreichen.

E' importante notare che la coppia di slittamento non resta sempre la medesima durante tutta la vita del limitatore.
Tende infatti a diminuire in rapporto al numero e alla durata degli slittamenti che, rodando le superfici di contatto, ne aumentano il rendimento.
È quindi opportuno verificare periodicamente, soprattutto durante la fase di rodaggio, la taratura del dispositivo.
Là dove sia richiesto un errore più contenuto nella taratura, è necessario testare la coppia trasmissibile sull'impianto.
Il dispositivo viene consegnato tarato alla coppia riportata a catalogo T_{2M} salvo diversa indicazione espressa in fase di ordinazione.

It is important to note that the slipping torque is not the same for the entire life of the torque limiter.
It usually decreases in connection with the number and the duration of slippings, this is due to the surfaces of the torque limiter becoming more engaged, therefore increasing the efficiency.
For this reason it is advisable to check the calibration of the device at regular intervals, specially during the running-in period.
Should a smaller calibration error be required, it is necessary to test the transmissible torque on the plant.
The torque limiter is supplied already calibrated at the torque value reported in the catalogue T_{2M}, unless otherwise specified in the order.

Es ist wichtig zu beachten, dass das Rutschmoment der Rutschkupplung über die gesamte Lebensdauer nicht konstant bleibt, sondern üblicherweise in Verbindung mit längeren Rutschzyklen aufgrund der eingelaufenen Berührungsflächen abnimmt.
Deswegen ist es ratsam, die Einstellung der Vorrichtung besonders während der Einlaufzeit in regelmäßigen Zeitabständen zu prüfen.
Falls ein niedriger Eichfehler verlangt wird, ist das übersetzbare Drehmoment auf der Anlage zu testen.
Wenn die Vorrichtung geliefert wird, ist sie schon auf dem im Katalog T_{2M} angegebenen Drehmoment geeicht, ausser wenn es in der Bestellung anders angegeben wird.

K	N°. giri della ghiera di regolazione / *N°. revolutions of ring nut* / Nr. Umdrehungen der Mutter															
	3/4	1	1 1/4	1 1/2	1 3/4	2	2 1/4	2 1/2	2 3/4	3	3 1/4	3 1/2	3 3/4	4	4 1/4	4 1/2
	M_{2S} [Nm]															
30		15	18	22	27	32										
40	23	30	35	40	45	50	60									
50		45	60	70	80	90	100	110								
63			80	90	100	110	120	130	140	150	160	170	180	190	200	
75		140	160	180	200	220	240	260	280	300						
90						230	280	310	330	350	380	410	435	460	490	510
110		420	500	560	670	730	810	910								
130																

Disposizione delle molle
Washers' arrangement
Lage der Feder

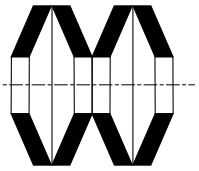

IN SERIE (min. coppia, max. sensibilità)
SERIES *(min. torque, max sensitivity)*
SERIE (min. Moment, max. Empfindlichkeit)

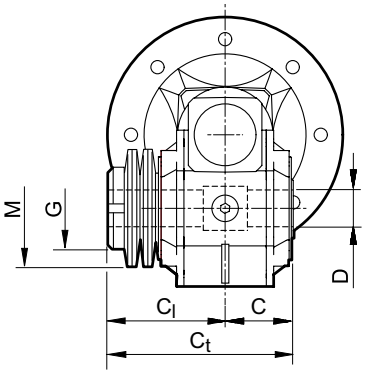

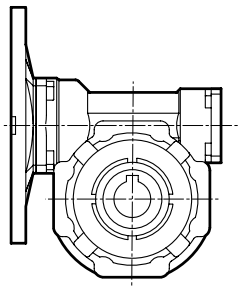

KC	C	C_l	C_t	D H7	M	G
30	31.5	55.5	87	14	50x25.4x1.25	M25x1.5
40	39	65	104	18 (19)	56x30.5x1.5	M30x1.5
50	46	76	122	25 (24)	63x40.5x1.8	M40x1.5
63	56	91	147	25	71x40.5x2	M40x1.5
75	60	100	160	28 (30)	90x50.5x2.5	M50x1.5
90	70	109	179	35 (32)	100x51x2.7	M50x1.5
110	77.5	127.5	205	42	125x61x4	M60x2.0
130						

( ) A richiesta / *On request* / Auf Anfrage

Nella versione con limitatore non è prevista la fornitura degli alberi lenti.

The version with torque limiter is supplied without output shafts.

Die Version mit Drehmomentbegrenzer wird ohne Abtriebswellen geliefert.

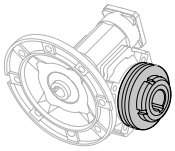

LD

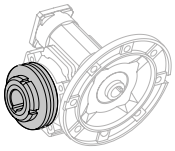

LS

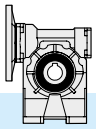

3.10 Accessori

3.10 Accessories

3.10 Accessories

Albero lento

Output shaft

Abtriebswelle

Albero lento semplice
Single output shaft
Standard Abtriebswelle

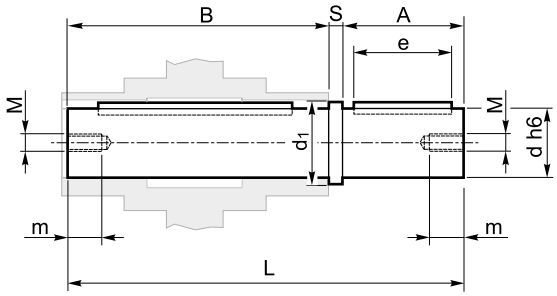

Albero lento doppio
Double output shaft
Doppelte Abtriebswelle

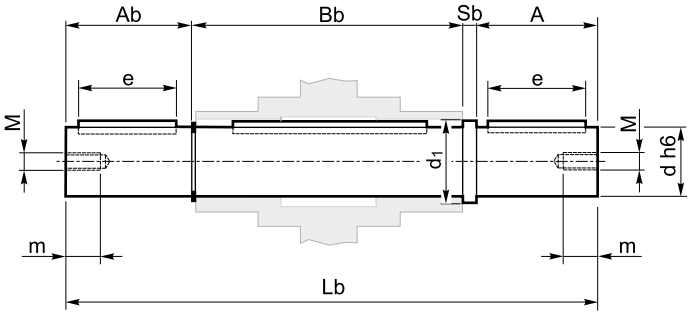

KC	A	B	d h6		d_1	e	L	M	m	S
30	30	62	**14**		18.5	20	94.5	M6	16	2.5
40	40	77	**18**	19	23.5	30	120	M6	16	3
50	50	90	**25**	24	31.5	40	143.5	M8	22	3.5
63	50	111	**25**		31.5	40	165	M8	22	4
75	60	119	**28**	30	34.5	50	183	M8	22	4
90	80	139	**35**		41.5	60	224	M10	28	5
110	80	154.5	**42**		49.5	60	242.5	M10	28	8
130	80	168	**45**		54.5	70	253	M16	36	5

A	A_b	B_b	d h6	d_1	e	L_b	S_b
30	29	64	**14**	18.5	20	126	2.5
40	39	79	**18**	23.5	30	161	3
50	49	93	**25**	31.5	40	195.5	3.5
50	49	113	**25**	31.5	40	216	4
60	59	121	**28**	34.5	50	244	4
80	78.5	141.5	**35**	41.5	60	305	5
80	77.5	157	**42**	49.5	60	322.5	8
80	78	172	**45**	54.5	70	335	5

Braccio di reazione

Torque arm

Drehmomentstütze

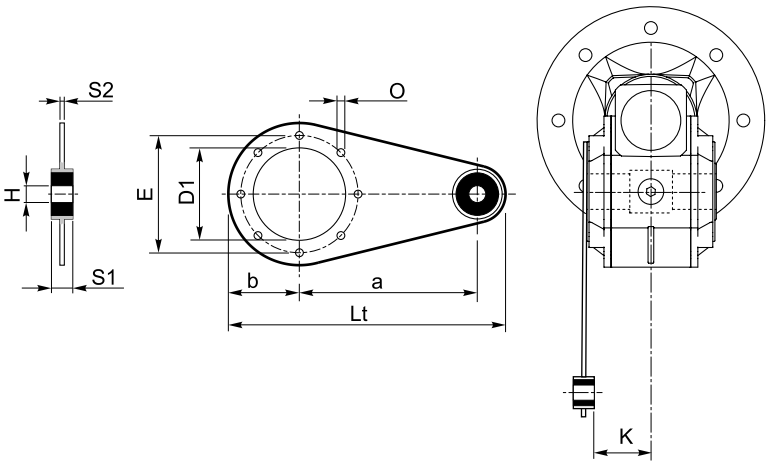

KC	a	b	D_1	E	H	K	L_t	O	S1	S2
30	85	37.5	55	65	8	24	141.5	7	14	4
40	100	45	60	75	10	31.5	167	7	14	4
50	100	50	70	85	10	39	172	9	14	5
63	150	55	80	95	10	49	227	9	14	6
75	200	70	95	115	20	47.5	302	9	25	6
90	200	80	110	130	20	57.5	312	11	25	6
110	250	100	130	165	25	62	390	11	30	6
130	250	125	180	215	25	69	415	13	30	6

Kit di protezione: *solo su versione P*

Protection Kit: *only for P Version*

Schutzvorrichtung: *nur für Version P*

Albero cavo / *Hollow shaft* / Hohlwelle

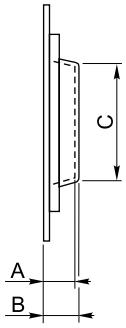

KC	A	B	C
30	12	13	39
40	14	15.5	44
50	15	16.5	54
63	17	19	60
75	18	20	70
90	21.5	24	80
110	22	25	96
130	22	25	130

Limitatore di coppia / *Torque limiter* / Drehmomentbegrenzer

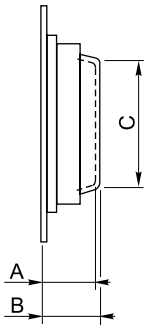

KC	A	B	C
30	36	37	36
40	40	41.5	44
50	47	48.5	53
63	52	54	55
75	58	60	68
90	60.5	63	70
110	72	75	85
130			

Opzioni disponibili:

Cuscinetti a rulli conici corona

Available options:

Tapered roller bearing for worm wheel

Auf Anfrage ist folgendes Zubehör erhältlich:
Kegelrollenlager für Schneckenrad

3.11 **Lista parti di ricambio** *3.11* ***Spare parts list*** 3.11 **Ersatzteilliste**

KC

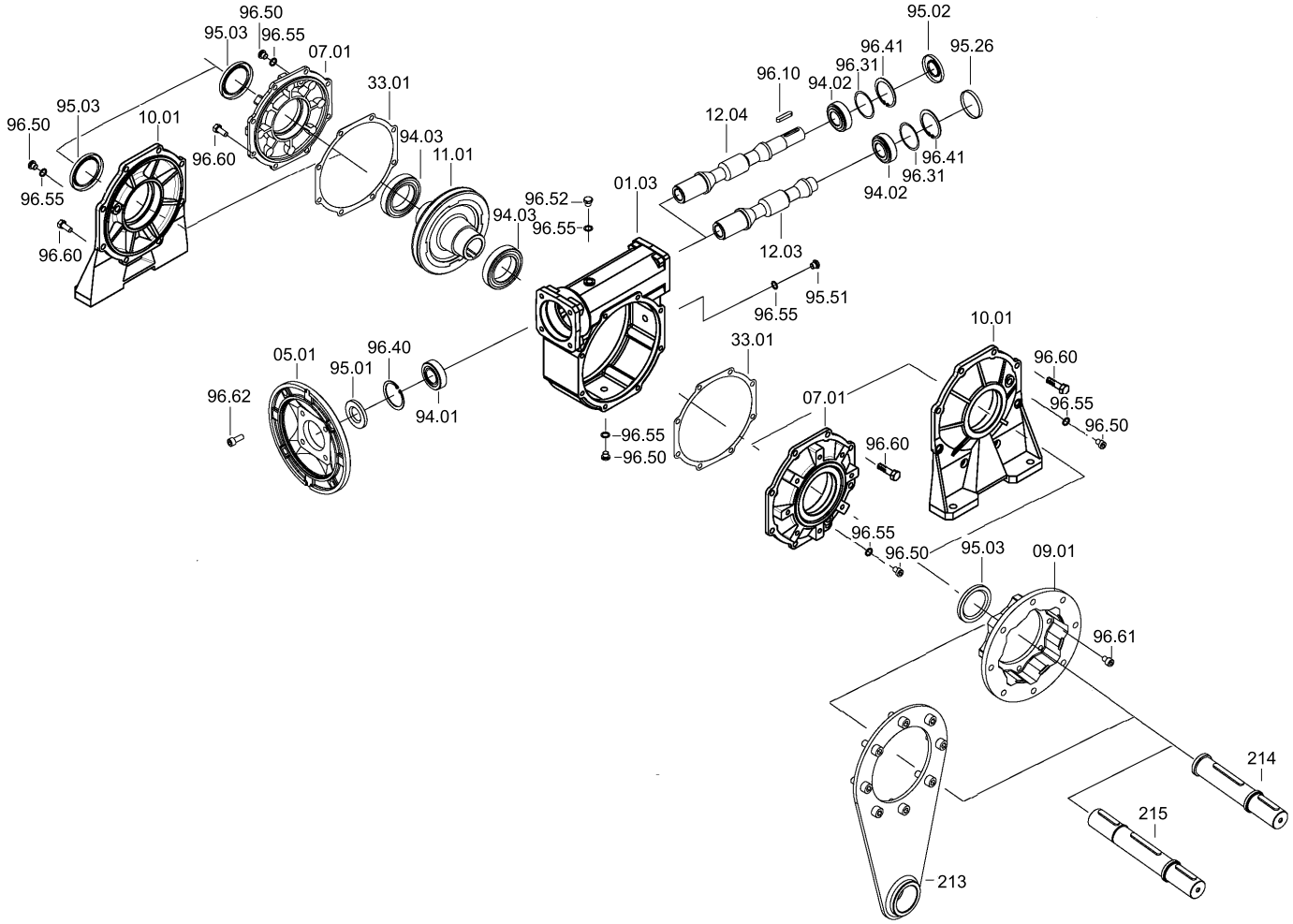

KC	IEC	Cuscinetti / *Bearings* / Lager				Anelli di tenuta / Oilseals Öldichtungen			Cappellotto / *Closed oil seal* Geschlossene Öldichtung
		94.01	**94.02**	**94.03**		**95.01**	**95.02**	**95.03**	**95.26**
30	56	**61804** (20x32x7)	**6000** 10x26x8	**6005** 25x47x12	***32005** 25x47x15	20/32/7	10/26/7	25/40/7	ø 26x7
	63	**61804** (20x32x7)				20/32/7			
40	56	**6303** (17x47x14)	**6201** 12x32x10	**6006** 30x55x13	***32006** 30x55x17	17/47/7	12/32/7	30/47/7	ø 32x7
	63	**6204** (20x47x14)				30x55x17			
	71	**6005** (25x47x12)				25/47/7			
50	63	**6204** (20x47x14)	**6203** 17x40x12	**6008** 40x68x15	***32008** 40x68x19	20/47/7	17/40/7	40/62/8	ø 40x7
	71	**6005** (25x47x12)				25/47/7			
	80	**6006** (30x55x13)				30/55/7			
63	71	**30305** (25x62x18.25)	**30204** 20x47x15.25	**6008** 40x68x15	***32008** 40x68x19	25/62/7	20/47/7	40/62/8	ø 47x7
	80	**30206** (30x62x17.25)				30/62/7			
	90	**32007** (35x62x18)				35/62/7			
75	80	**30206** (30x62x17.25)	**30205** 25x52x16.25	**6010** 50x80x16	***32010** 50x80x20	30/62/7	25/52/7	50/72/8	ø 52x7
	90	**32007** (35x62x18)				35/62/7			
	100/112	**32008** (40x68x19)				40/68/10			
90	80	**30206** (30x62x17.25)	**32205B** 25x52x19.25	**6010** 50x80x16	***32010** 50x80x20	30/62/7	25/52/7	50/72/8	ø 52x7
	90	**32007** (35x62x18)				35/62/7			
	100/112	**32008** (40x68x19)				40/68/10			
110	90	**30208** (40x80x19.75)	**32206B** 30x62x21.25	**6012** 60x95x18	***32012** 60x95x23	40/80/10	30/62/7	60/85/8	ø 62x7
	100/112	**30208** (40x80x19.75)				40/80/10			
	132	**32010** (50x80x20)				50/80/10			
130	90	**30208** (40x80x19.75)	**33208** 40x80x32	**6015** 75x115x20	***32015** 75x115x25	40/80/10	40/80/10	75/100/10	ø 80x10
	100/112	**30208** (40x80x19.75)				40/80/10			
	132	**32010** (50x80x20)				50/80/10			

* Cuscinetti a rulli conici a richiesta - Tapered roller bearings on request - Auf Wunsch Kegelrollenlager